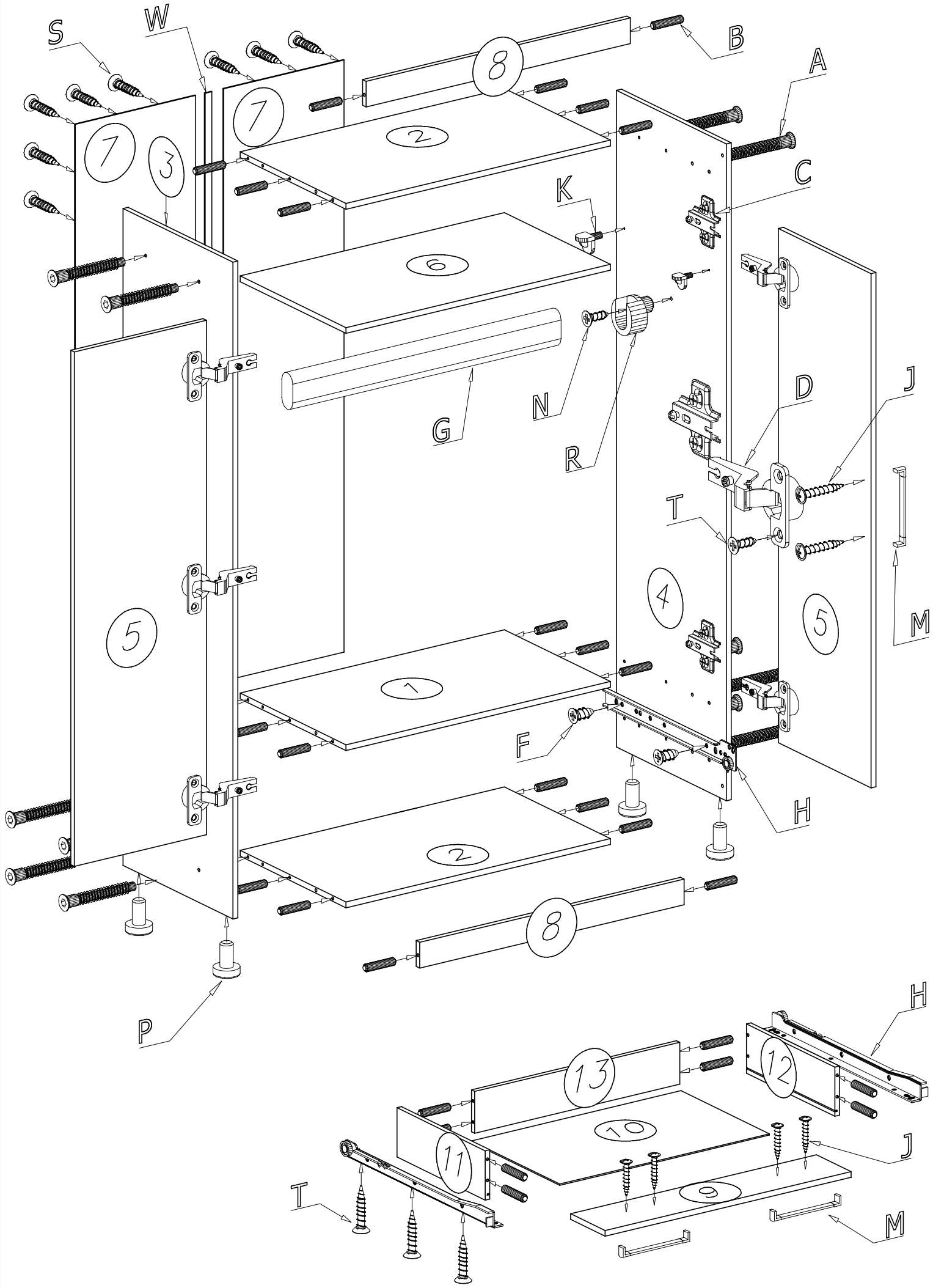
S
W
B
A
8
7
7
2
3
C
K
6
N
G
R
D
J
T
4
5
5
M
1
F
H
2
8
P
H
13
12
10
11
J
T
9
M